SPECIFICATIONS	
HOUSING MATERIAL/COLOR	NYLON 66/BLACK

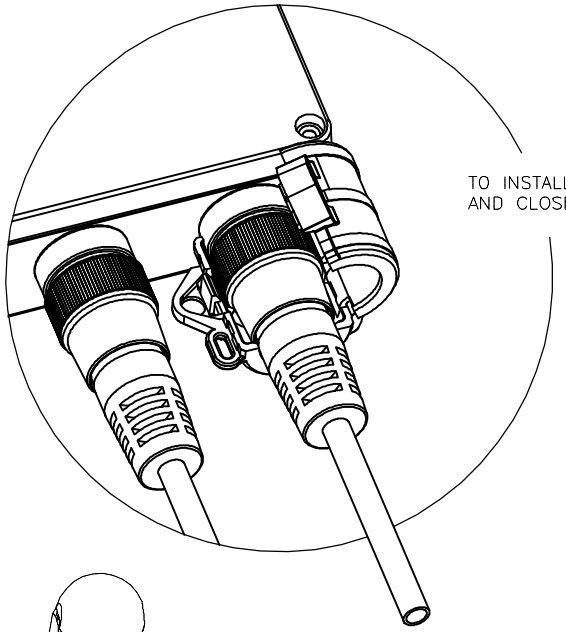

TO INSTALL LOCKOUT DEVICE, PLACE AROUND CORDSET END AND CLOSE UNTIL CONNECTOR SNAPS CLOSED.

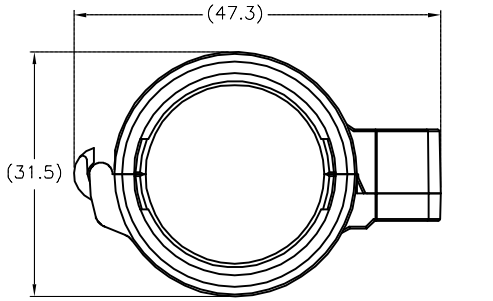

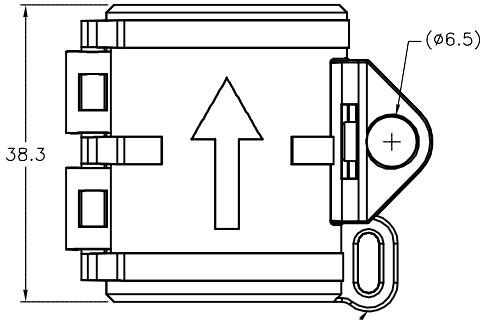

RECEPTACLE FOR OPTIONAL TETHER STRAP

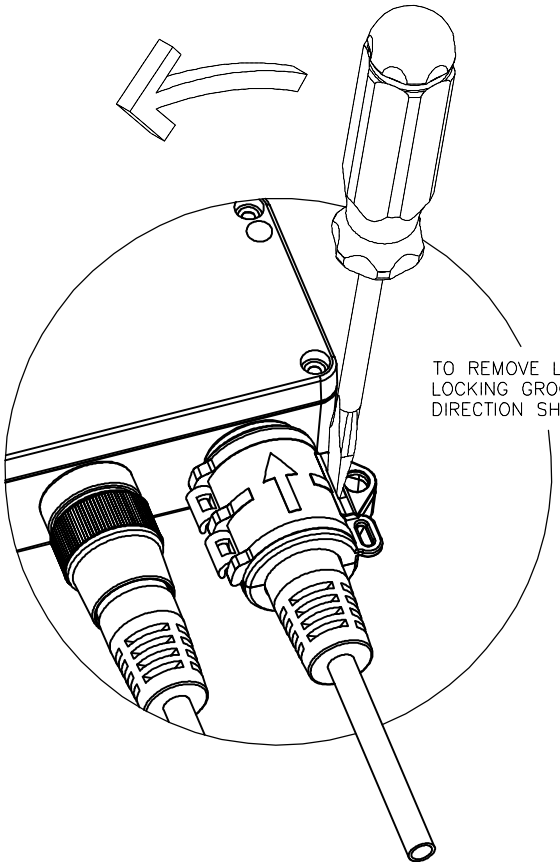

TO REMOVE LOCKOUT DEVICE, INSERT SMALL SCREWDRIVER INTO LOCKING GROOVE AS SHOWN IN PICTURE. ROTATE SCREWDRIVER IN DIRECTION SHOWN UNTIL LOCKING DEVICE RELEASES.

CAUTION LABEL

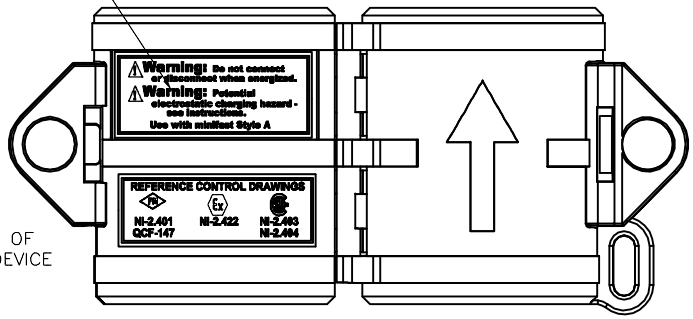

OPEN VIEW OF LOCKOUT DEVICE

LOCKOUT DEVICE FITS TURCK MOLDED MINIFAST A SIZED CORDSETS TO MINIFAST RECEPTACLES.

OPENED VIEW OF LOCKOUT DEVICE

SOURCE DRAWING - FOR REFERENCE ONLY

REV	DESCRIPTION	BY	DATE	ECO NO.
E	UPDATE COMPONENTS	RDS	11/02/16	55161

RELATED DOCUMENTS
1.
2.
3.
4.

3RD ANGLE PROJECTION

MATERIAL

FINISH

ALL DIMENSIONS DISPLAYED ON THIS DRAWING ARE FOR REFERENCE ONLY

CONTACT TURCK FOR MORE INFORMATION

THIS DRAWING IS CONFIDENTIAL AND THE PROPERTY OF TURCK INC. USE OF THIS DOCUMENT WITHOUT WRITTEN PERMISSION IS PROHIBITED.

TURCK

3000 CAMPUS DRIVE
MINNEAPOLIS, MN 55441
1-800-544-7769
(763) 553-7300
(763) 553-0708 fax
www.turck.us

DRFT RDS | DATE 12/29/04
APVD | SCALE 1=1.0

UNIT OF MEASUREMENT
MILLIMETERS

DO NOT SCALE THIS DRAWING

DESCRIPTION: LOCK-MINI (10/BAG)

IDENTIFICATION NO.: A0884 | REV: E

FILE: A0884 | SHEET 1 OF 1

Approved 11/09/2016, work order #118917 by J.B.